DHI-SCP3022B-IBZ-S

2-Wire IP Smart Control Panel



Functions

Smart Control Panel

Features multiple functions such as video intercom, video monitoring and wireless alarm. Its Android 14 system supports the installation of APK files, allowing for the expansion of third-party applications.

Scene

It is ideal for villas, communities, apartments and hotels, and is well suited for offices.

Technical Specification

System

Main Processor	Embedded Processor
Operating System	Android 14
Button Type	Mechanical
Network Protocol	IPv4;RTSP;UDP;DNS;FTP;RTP;TCP;SIP

Basic

Screen Type	Capacitive Touchscreen
Display Screen	7-inch display screen
Screen Resolution	1024 (H) × 600 (V)
Audio Compression	G.711a; G.711u; PCM
Audio Input	2 channels
Audio Output	Built-in speaker
Audio Mode	Two-way audio
Audio Enhancement	Echo suppression/digital noise reduction
Audio Bit Rate	16 kHz, 16 bit

- Adopts the Android 14 system, 4 GB RAM + 16 GB ROM, offering advanced performance and a user-friendly experience.
- Featuring a sleek full-screen design with an ultra-narrow black border, this device combines style and minimalism for an exceptional visual experience.
- With its 7-inch IPS capacitive touchscreen and multi-touch technology, the screen offers wide viewing angles of up to 80 degrees both horizontally and vertically, significantly enhancing work efficiency and operational flexibility.
- Includes multi-color indicators that feature the breathing light function to keep you updated on status changes.
- Wakes up automatically when a person approaches for a seamless experience.
- Equipped with a built-in light sensor, the device automatically adjusts the screen brightness for comfortable viewing.
- With its built-in temperature and humidity detectors, you can effortlessly monitor the conditions in your house at any time straight from the home screen.
- Supports multiple communication modes including IP, Wi-Fi and IP two-wire.
- Buttons can be removed and replaced, and their related functions can be personalized.
- Compatible with hearing loop systems, this control screen can be easily connected to hearing aids, ensuring accessibility for individuals with hearing disabilities.

Function

Communication Mode	Full digital;Digital 2-wire
Information Release	Receive and view the published information from the management center
Elevator Control	Residents can call the elevator through this device to their floor.
Leave Videos	Yes (SD card is inserted in the indoor monitor or door station)
DND Mode	Do not disturb period can be set
Number of Extensions	Villa: 1 main VTH and 9 extensions Apartment: 1 main VTH and 4 extensions
Storage	Supports micro SD card storage (up to 512 GB)

Network

Wi-Fi	Yes
Wireless Standard	IEEE 802.11b/g/n
Wireless Frequency Range	2.4 GHz
Max. Transmission Power	≤ 20 dBm @ 2400-2483.5 MHz

DHI-SCP3022B-IBZ-S

Bluetooth

Wireless Standard	BR/EDR/BLE
Wireless Frequency Range	2400-2483.5 MHz
Max. Transmission Power	≤ 20 dBm @ 2400-2483.5 MHz
Bluetooth	Yes

Zigbee

Wireless Standard	802.15.4
Wireless Frequency Range	2400-2483.5 MHz
Max. Transmission Power	≤ 10 dBm @ 2400-2483.5 MHz
Zigbee	Zigbee 3.0: Reserved to realize third-party access.

Sub 1G

Wireless Frequency Range	868-868.6 MHz
Max. Transmission Power	14 dBm @ 868-868.6MHz
Modulation Method	FSK/GFSK

Port

RS-485	1
USB	1
Alarm Input	8 channels
Alarm Output	1 channel
Power Output	1 port (12 V, 200 mA)
Doorbell	Yes (use the alarm input port)
Network Port	1 × 10/100 Mbps Ethernet port

Performance

Casing Material	PC + ABS

General

Appearance Color	Gray
Power Supply	48 VDC, 0.5 A Standard PoE
Power Adapter	Optional
Installation	Surface Mount
Certifications	CE
Accessory	Included: RS-485 and power output cable, bracket and alarm cable. Optional: Power cord
Product Dimensions	210.2 mm × 103.1 mm × 18.6 mm (8.28" × 4.06" × 0.73") (H × W × D)
Operating Temperature	-10 °C to +55 °C (+14 °F to +131 °F)
Operating Humidity	10%–95% (RH), non-condensing
Operating Altitude	Below 3,000 m (9,842.52 ft)
Power Consumption	≤ 8 W (standby), ≤ 13 W (working)
Gross Weight	0.89 kg (1.96 lb)
Storage Temperature	0 °C to +40 °C (+32 °F to +104 °F)
Storage Humidity	30%–75%
Operating Environment	Indoor

Ordering Information

Type	Model	Description
Smart Control Panel	DHI-SCP3022B-IBZ-S	2-Wire IP Smart Control Panel

Installation

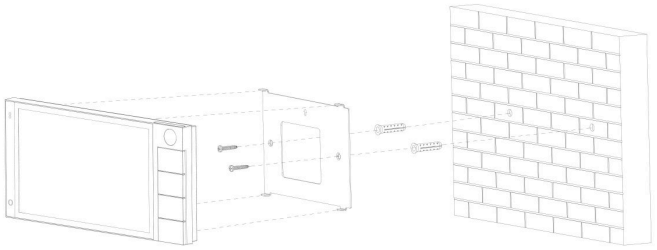

Dimensions (mm[inch])

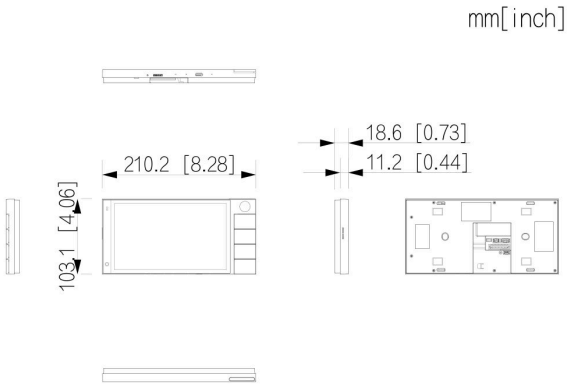

Application

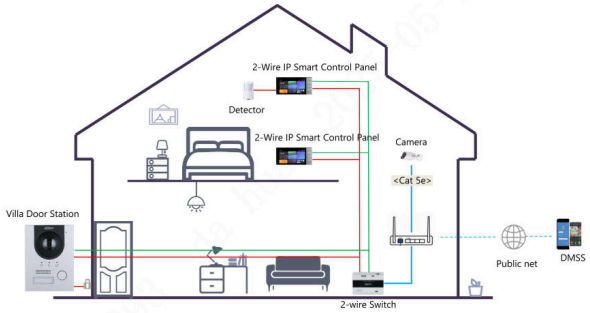

Rev 002.000 © 2026 Dahua. All rights reserved. Design and specifications are subject to change without notice. Pictures in the document are for reference only, and the actual product shall prevail.